REVISIONS

REV	DESCRIPTION

Power and Ground

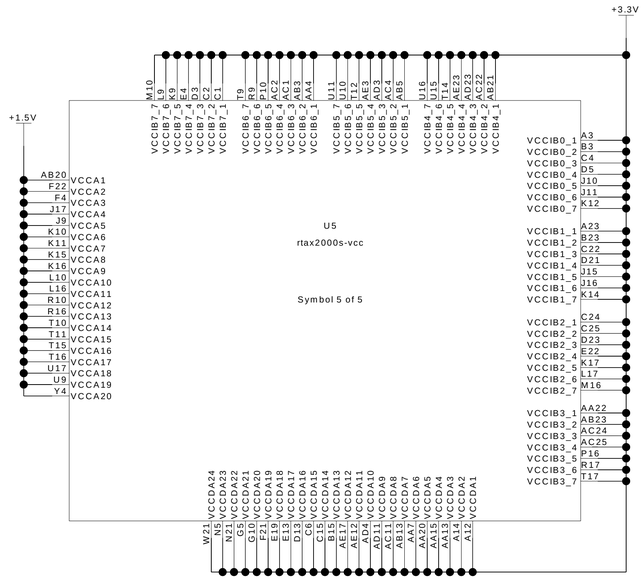

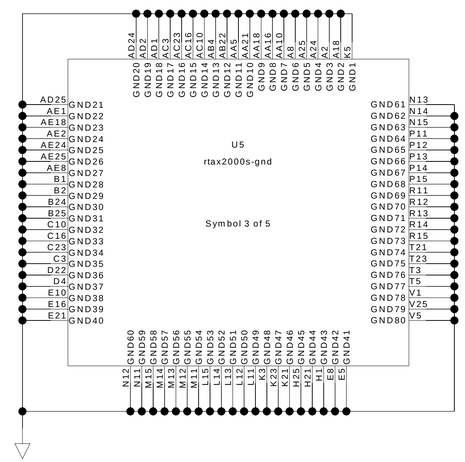

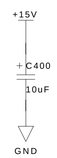

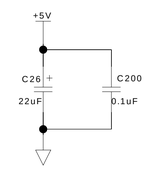

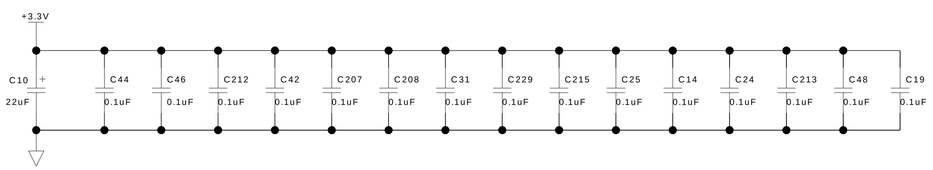

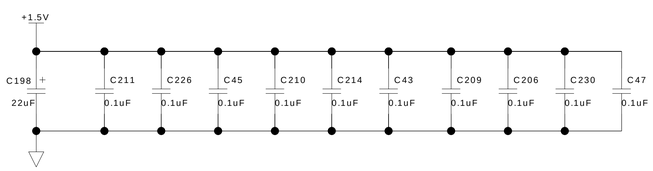

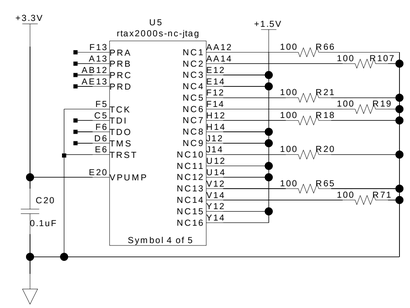

AX2000-CG684 (commercial part) and AX2000-FG896 (socket part) require 1.5V on VCCPL pins and open VCOMPL pins.
Commercial VCCPL pins can also be 1.5V for those flight NC pins

See CCGA to FPGA adapter socket app note and pin mapping list for details

Tie floating NC# to ground for flight use, but can not be grounded for
AX2000-CG684 (commercial part) and AX2000-FG896 (socket part)

DOCUMENT CONTAINS EXPORT-CONTROLLED INFORMATION

CAGE CODE	SIZE	DWG NO.	REV
88898	D	7464-4001	-

SCALE NONE | DO NOT SCALE PRINT | SHEET 2 OF 18

CAD SYSTEM IDENT Version | APL CAD FILE IDENT File Path

30/09/2014 09:49

REVISIONS

REV	DESCRIPTION

Memory and Actel Support

Oscillator

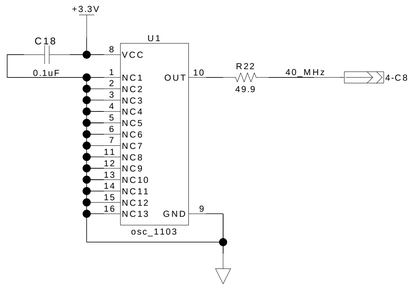

Power-on Reset

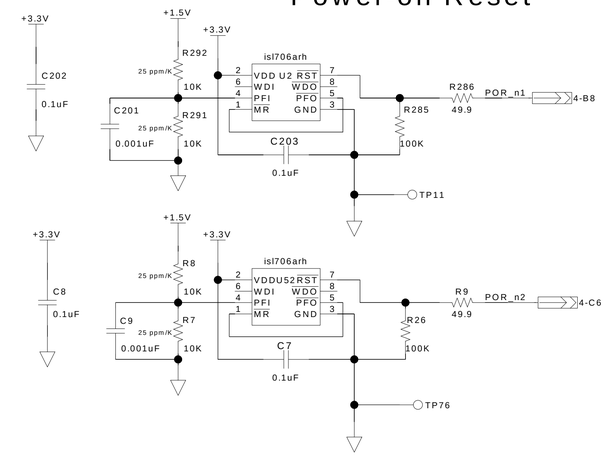

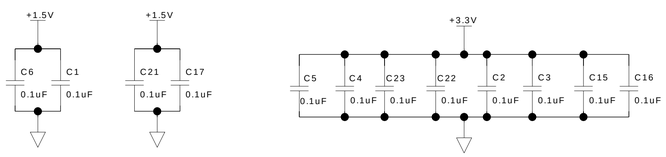

RAM

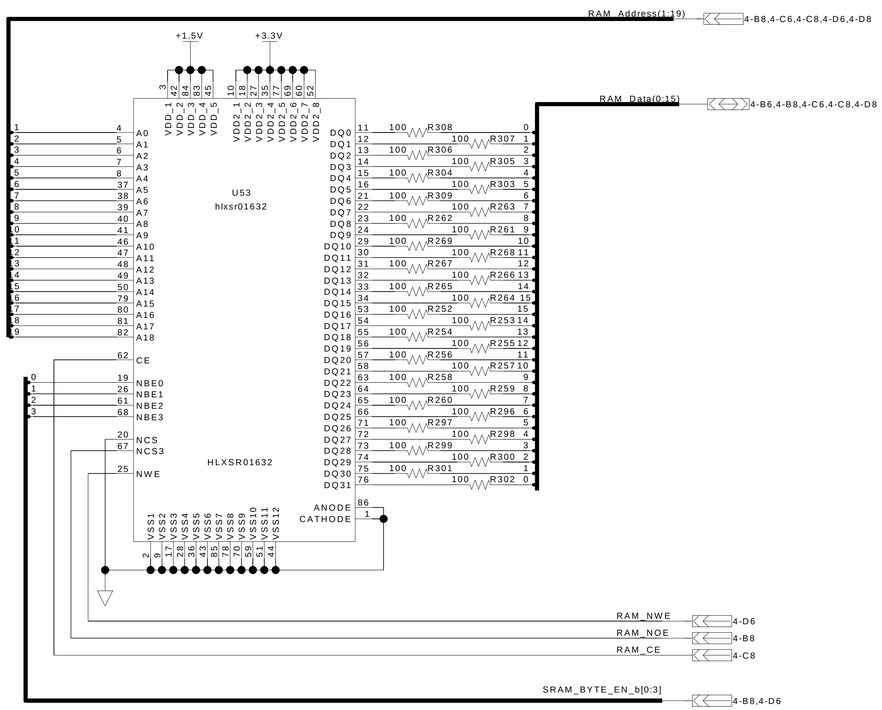

PROM and MRAM

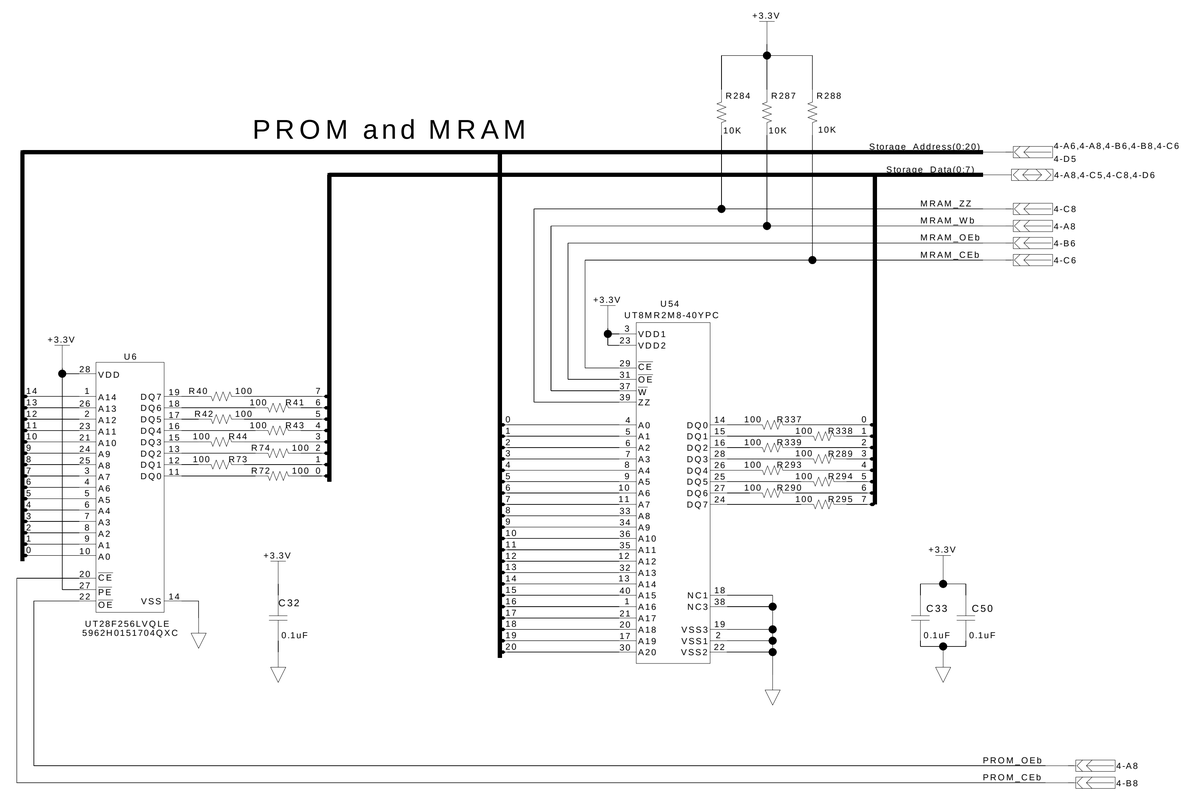

DOCUMENT CONTAINS EXPORT-CONTROLLED INFORMATION

CAGE CODE	SIZE	DWG NO.	REV
88898	D	7464-4001	-

SCALE: NONE — DO NOT SCALE PRINT — SHEET 3 OF 18

CAD SYSTEM IDENT: Version

APL CAD FILE IDENT: File Path

01/10/2014:08:38

REVISIONS

REV	DESCRIPTION

FPGA

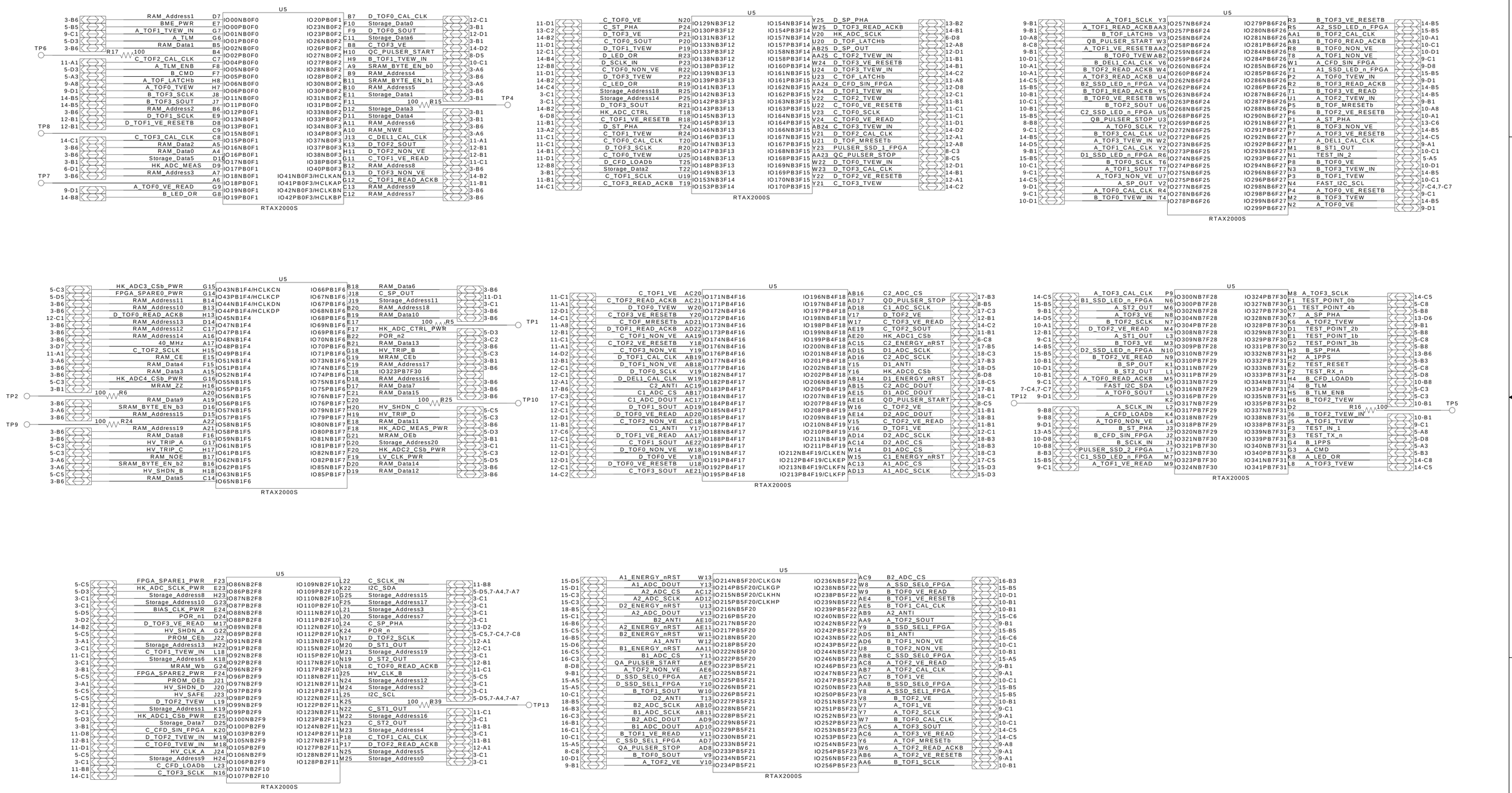
U5
RTAX2000S
RAM_Address1 D7
BME_PWR E7
A_TOF1_TVEW_IN G7
A_TLM G6
RAM_Data1 B5
R17 100
C_TOF2_CAL_CLK C7
A_TLM_ENB F8
B_CMD F7
A_TOF_LATCHb H8
A_TOF0_TVEW H7
B_TOF3_SCLK J8
B_TOF3_SOUT J7
RAM_Address2 B6
D_TOF1_SCLK E9
D_TOF1_VE_RESETB D8
C_TOF3_CAL_CLK C8
RAM_Data2 A5
RAM_Data0 A4
Storage_Data5 D10
HK_ADC_MEAS D9
RAM_Address3 A7
A6
A_TOF0_VE_READ G9
B_LED_OR G8
IO00NB0F0
IO00PB0F0
IO01NB0F0
IO01PB0F0
IO02NB0F0
IO02PB0F0
IO04PB0F0
IO05NB0F0
IO05PB0F0
IO06NB0F0
IO06PB0F0
IO11NB0F0
IO11PB0F0
IO12PB0F1
IO13NB0F1
IO13PB0F1
IO15NB0F1
IO15PB0F1
IO16NB0F1
IO16PB0F1
IO17NB0F1
IO17PB0F1
IO18NB0F1
IO18PB0F1
IO19NB0F1
IO19PB0F1
IO20PB0F1
IO23NB0F2
IO23PB0F2
IO26NB0F2
IO26PB0F2
IO27NB0F2
IO27PB0F2
IO28NB0F2
IO28PB0F2
IO30NB0F2
IO30PB0F2
IO31NB0F2
IO31PB0F2
IO33NB0F2
IO33PB0F2
IO34NB0F2
IO34PB0F2
IO37NB0F3
IO37PB0F3
IO38NB0F3
IO38PB0F3
IO40PB0F3
IO41NB0F3/HCLKAN
IO41PB0F3/HCLKAP
IO42NB0F3/HCLKBN
IO42PB0F3/HCLKBP
B7 D_TOF0_CAL_CLK
F10 Storage_Data0
F9 D_TOF0_SOUT
C11 Storage_Data6
B8 C_TOF3_VE
H10 QC_PULSER_START
H9 B_TOF1_TVEW_IN
A9 SRAM_BYTE_EN_b0
B9 RAM_Address4
B11 SRAM_BYTE_EN_b1
B10 RAM_Address5
E11 Storage_Data1
F11 100 R15
D12 Storage_Data3
D11 Storage_Data4
A11 RAM_Address6
A10 RAM_NWE
J13 C_DEL1_CAL_CLK
K13 D_TOF2_SOUT
H11 D_TOF2_NON_VE
G11 C_TOF1_VE_READ
B12 RAM_Address8
G13 D_TOF3_NON_VE
G12 C_TOF1_READ_ACKB
C13 RAM_Address9
C12 RAM_Address7
TP6
TP8
TP7
TP4
3-B6 5-B5 9-C1 5-D3 3-B6 11-A1 5-A3 9-A8 9-D1 14-B5 14-B5 3-B6 12-B1 12-B1 14-C1 3-B6 3-B6 3-B1 6-D1 3-B6 9-D1 14-B8
12-C1 3-B1 3-B1 12-D1 3-B1 14-D2 8-D5 10-C1 3-A6 3-B6 3-A6 3-B6 3-B1
U5
RTAX2000S
C_TOF0_VE N20
C_ST_PHA P24
D_TOF3_VE P21
C_TOF0_SOUT P20
D_TOF1_TVEW P19
D_LED_OR P23
D_SCLK_IN P23
C_TOF0_NON_VE R22
D_TOF3_TVEW P22
C_LED_OR R19
Storage_Address18 R25
Storage_Address14 P25
D_TOF3_SOUT R21
HK_ADC_CTRL T18
C_TOF1_VE_RESETB R18
D_ST_PHA T24
C_TOF1_TVEW R24
C_TOF0_CAL_CLK T20
D_TOF3_SCLK R20
C_TOF0_TVEW U25
D_CFD_LOADb T25
Storage_Data2 T22
C_TOF1_SCLK U19
C_TOF3_READ_ACKB T19
IO129NB3F12
IO130PB3F12
IO131NB3F12
IO133NB3F12
IO133PB3F12
IO138NB3F12
IO138PB3F12
IO139NB3F13
IO139PB3F13
IO141NB3F13
IO142NB3F13
IO142PB3F13
IO143PB3F13
IO145NB3F13
IO145PB3F13
IO146NB3F13
IO146PB3F13
IO147NB3F13
IO147PB3F13
IO148NB3F13
IO148PB3F13
IO149NB3F13
IO153NB3F14
IO153PB3F14
IO154NB3F14
IO154PB3F14
IO157NB3F14
IO157PB3F14
IO158NB3F14
IO158PB3F14
IO160PB3F14
IO161NB3F15
IO161PB3F15
IO162NB3F15
IO162PB3F15
IO163NB3F15
IO163PB3F15
IO164NB3F15
IO164PB3F15
IO166NB3F15
IO167NB3F15
IO167PB3F15
IO168NB3F15
IO168PB3F15
IO169NB3F15
IO169PB3F15
IO170NB3F15
IO170PB3F15
Y25 D_SP_PHA
W25 D_TOF3_READ_ACKB
V20 HK_ADC_SCLK
U20 D_TOF_LATCHb
AB25 D_SP_OUT
AA25 C_TOF2_TVEW_IN
W24 D_TOF3_VE_RESETB
U24 D_TOF3_TVEW_IN
U23 C_TOF_LATCHb
AA24 D_CFD_SIN_FPGA
Y24 D_TOF1_TVEW_IN
V22 C_TOF2_TVEW
U22 C_TOF0_VE_RESETB
V23 C_TOF0_SCLK
V24 C_TOF0_VE_READ
AB24 C_TOF3_TVEW_IN
V21 D_TOF2_CAL_CLK
U21 D_TOF_MRESETb
Y23 PULSER_SSD_1_FPGA
AA23 QC_PULSER_STOP
W22 D_TOF0_TVEW_IN
W23 D_TOF3_CAL_CLK
Y22 D_TOF2_VE_RESETB
Y21 C_TOF3_TVEW
13-B2 14-B1 6-D8 12-A8 12-D1 11-B1 14-B1 14-C2 11-A8 12-D8 12-C1 11-B1 11-C1 11-D1 14-D2 12-A1 12-A8 8-C3 8-C5 12-D1 14-B1 12-A1 14-C2
U5
RTAX2000S
A_TOF1_SCLK Y3
A_TOF1_READ_ACKB AA3
B_TOF_LATCHb V3
QB_PULSER_START W3
A_TOF1_VE_RESETB AA2
B_TOF0_TVEW AB2
B_DEL1_CAL_CLK V6
B_TOF2_READ_ACKB W4
A_TOF3_READ_ACKB U4
B2_SSD_LED_n_FPGA V4
B_TOF1_READ_ACKB Y5
B_TOF0_VE_RESETB W5
B_TOF2_SOUT U6
C2_SSD_LED_n_FPGA U5
QB_PULSER_STOP U3
A_TOF0_SCLK T2
B_TOF3_CAL_CLK U2
A_TOF3_TVEW_IN W2
A_TOF1_CAL_CLK Y2
D1_SSD_LED_n_FPGA R6
B_TOF0_SCLK T6
A_TOF1_SOUT T7
A_TOF3_NON_VE U7
A_SP_OUT V2
A_TOF0_CAL_CLK R4
B_TOF0_TVEW_IN T4
IO257NB6F24
IO257PB6F24
IO258NB6F24
IO258PB6F24
IO259NB6F24
IO259PB6F24
IO260NB6F24
IO260PB6F24
IO262NB6F24
IO262PB6F24
IO263NB6F24
IO263PB6F24
IO268NB6F25
IO268PB6F25
IO269PB6F25
IO272NB6F25
IO272PB6F25
IO273NB6F25
IO273PB6F25
IO274NB6F25
IO274PB6F25
IO275NB6F25
IO275PB6F25
IO277NB6F25
IO278NB6F26
IO278PB6F26
IO279PB6F26
IO280NB6F26
IO281NB6F26
IO281PB6F26
IO284NB6F26
IO284PB6F26
IO285NB6F26
IO285PB6F26
IO286NB6F26
IO286PB6F26
IO287NB6F26
IO287PB6F26
IO288NB6F26
IO290NB6F27
IO291NB6F27
IO291PB6F27
IO292NB6F27
IO292PB6F27
IO293NB6F27
IO293PB6F27
IO294NB6F27
IO296NB6F27
IO296PB6F27
IO298NB6F27
IO298PB6F27
IO299NB6F27
IO299PB6F27
R3 B_TOF3_VE_RESETB
R5 A2_SSD_LED_n_FPGA
AA1 B_TOF2_CAL_CLK
AB1 B_TOF0_READ_ACKB
R8 B_TOF0_NON_VE
T8 A_TOF1_NON_VE
W1 A_CFD_SIN_FPGA
Y1 A1_SSD_LED_n_FPGA
P2 A_TOF0_TVEW_IN
R2 B_TOF3_READ_ACKB
T1 B_TOF3_VE_READ
U1 A_TOF2_TVEW_IN
P5 B_TOF_MRESETb
P6 B_TOF2_VE_RESETB
P1 A_ST_PHA
R1 B_TOF3_NON_VE
P7 A_TOF3_VE_RESETB
R7 A_DEL1_CAL_CLK
M1 B_STI_OUT
N1 TEST_IN_2
P8 B_TOF0_VE
N3 B_TOF3_TVEW_IN
P3 B_TOF1_TVEW
N4 FAST_I2C_SCL
P4 A_TOF0_VE_RESETB
M2 B_TOF3_TVEW
N2 A_TOF0_VE
14-B5 15-B5 10-A1 10-C1 10-D1 9-C1 9-D8 15-B5 9-D1 14-B5 14-B5 9-B1 10-A8 10-A1 13-C6 14-B5 14-C5 9-A1 10-C1 5-A5 10-D1 14-B5 10-C1 7-C4,7-C7 9-C1 14-B5 9-D1
U5
RTAX2000S
HK_ADC3_CSb_PWR G15
FPGA_SPARE0_PWR G14
RAM_Address11 B14
RAM_Address10 B13
D_TOF0_READ_ACKB H13
RAM_Address13 D14
RAM_Address12 C17
RAM_Address14 A16
40_MHz A17
C_TOF2_SCLK H15
RAM_CE E15
RAM_Data4 F15
RAM_Data3 A15
HK_ADC4_CSb_PWR G16
MRAM_ZZ H16
R6 100
RAM_Data9 A19
SRAM_BYTE_EN_b3 D16
RAM_Address15 D15
R24 100
RAM_Address19 A21
RAM_Data8 F16
HV_TRIP_A G17
HV_TRIP_C H17
RAM_NOE B17
SRAM_BYTE_EN_b2 B16
HV_SHDN_B H18
RAM_Data5 C14
IO043NB1F4/HCLKCN
IO043PB1F4/HCLKCP
IO044NB1F4/HCLKDN
IO044PB1F4/HCLKDP
IO045NB1F4
IO047NB1F4
IO047PB1F4
IO048NB1F4
IO048PB1F4
IO049PB1F4
IO051NB1F4
IO051PB1F4
IO052NB1F4
IO055NB1F5
IO055PB1F5
IO056NB1F5
IO056PB1F5
IO057NB1F5
IO057PB1F5
IO058PB1F5
IO059NB1F5
IO061NB1F5
IO061PB1F5
IO062NB1F5
IO062PB1F5
IO063NB1F5
IO065NB1F6
IO066PB1F6
IO067NB1F6
IO067PB1F6
IO068NB1F6
IO068PB1F6
IO069NB1F6
IO069PB1F6
IO070NB1F6
IO070PB1F6
IO071PB1F6
IO073NB1F6
IO074NB1F6
IO074PB1F6
IO075NB1F6
IO075PB1F6
IO076NB1F7
IO076PB1F7
IO079NB1F7
IO079PB1F7
IO080PB1F7
IO081NB1F7
IO081PB1F7
IO082NB1F7
IO082PB1F7
IO085NB1F7
IO085PB1F7
B18 RAM_Data6
J18 C_SP_OUT
J19 Storage_Address11
B20 RAM_Address18
B19 RAM_Data10
E17 100 R5
F17 HK_ADC_CTRL_PWR
B22 POR_n2
B21 RAM_Data13
G18 HV_TRIP_B
G19 MRAM_CEb
C19 RAM_Address17
C18 IO323PB7F30
D18 RAM_Address16
D17 RAM_Data7
C21 RAM_Data15
C20 100 R25
H20 HV_SHDN_C
H19 HV_TRIP_D
E18 RAM_Data11
F18 HK_ADC_MEAS_PWR
G21 MRAM_OEb
G20 Storage_Address20
F20 HK_ADC2_CSb_PWR
F19 LV_CLK_PWR
D20 RAM_Data14
D19 RAM_Data12
TP2
TP9
TP1
TP10
3-B6 3-B6 3-B6

REVISIONS

REV	DESCRIPTION

Test Port

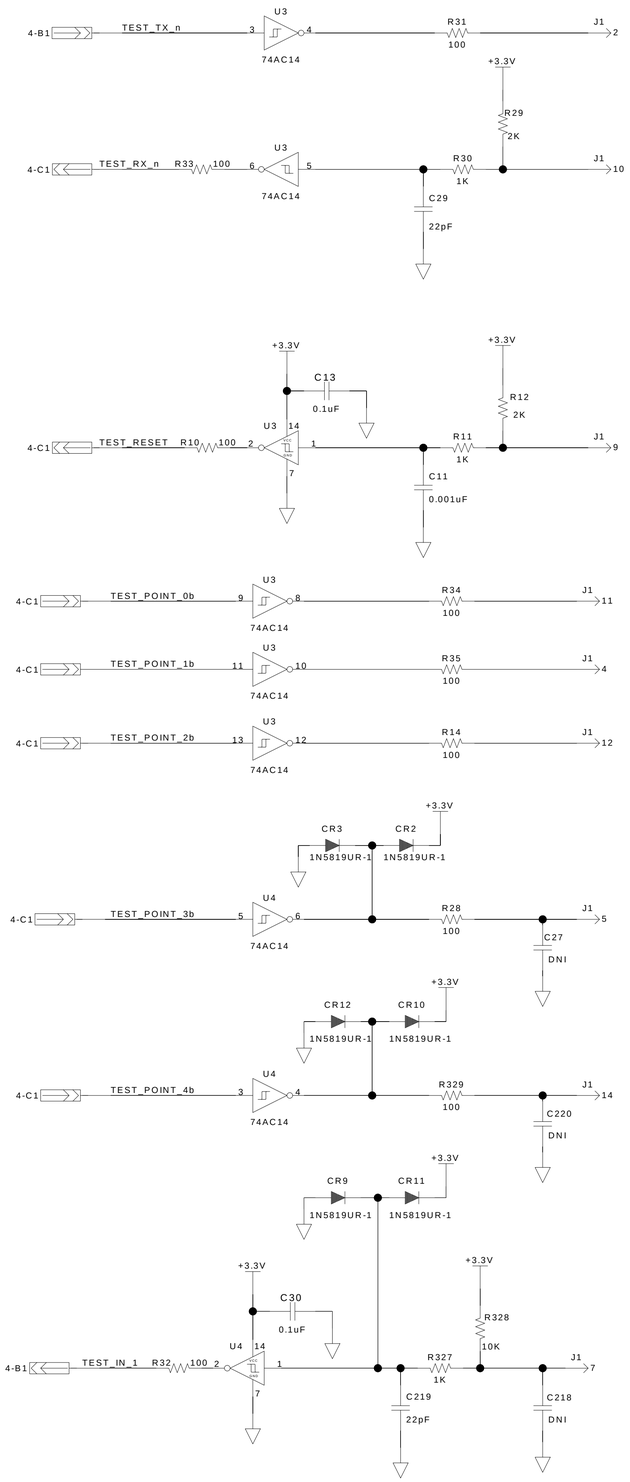

Communication

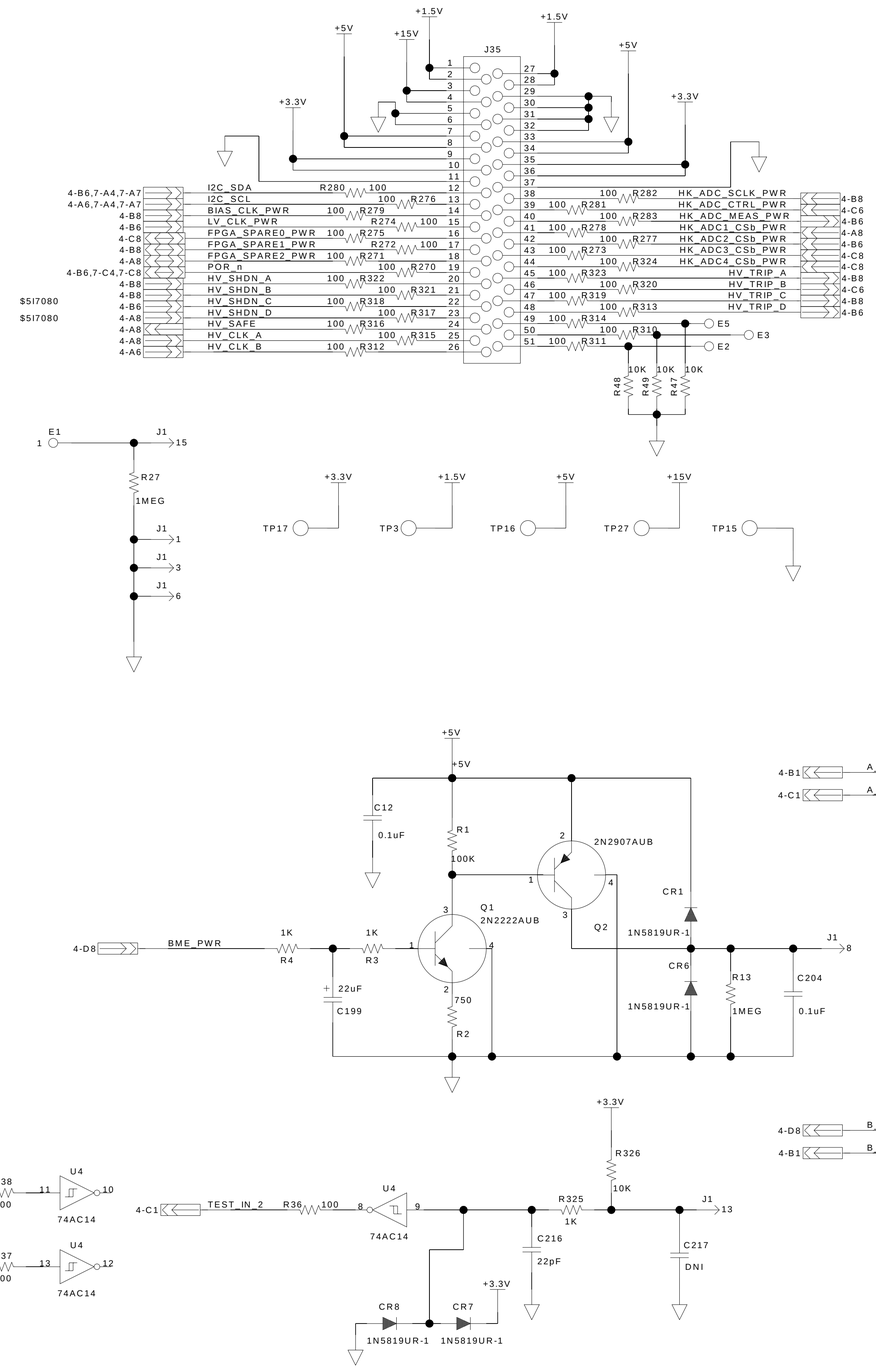

LVDS

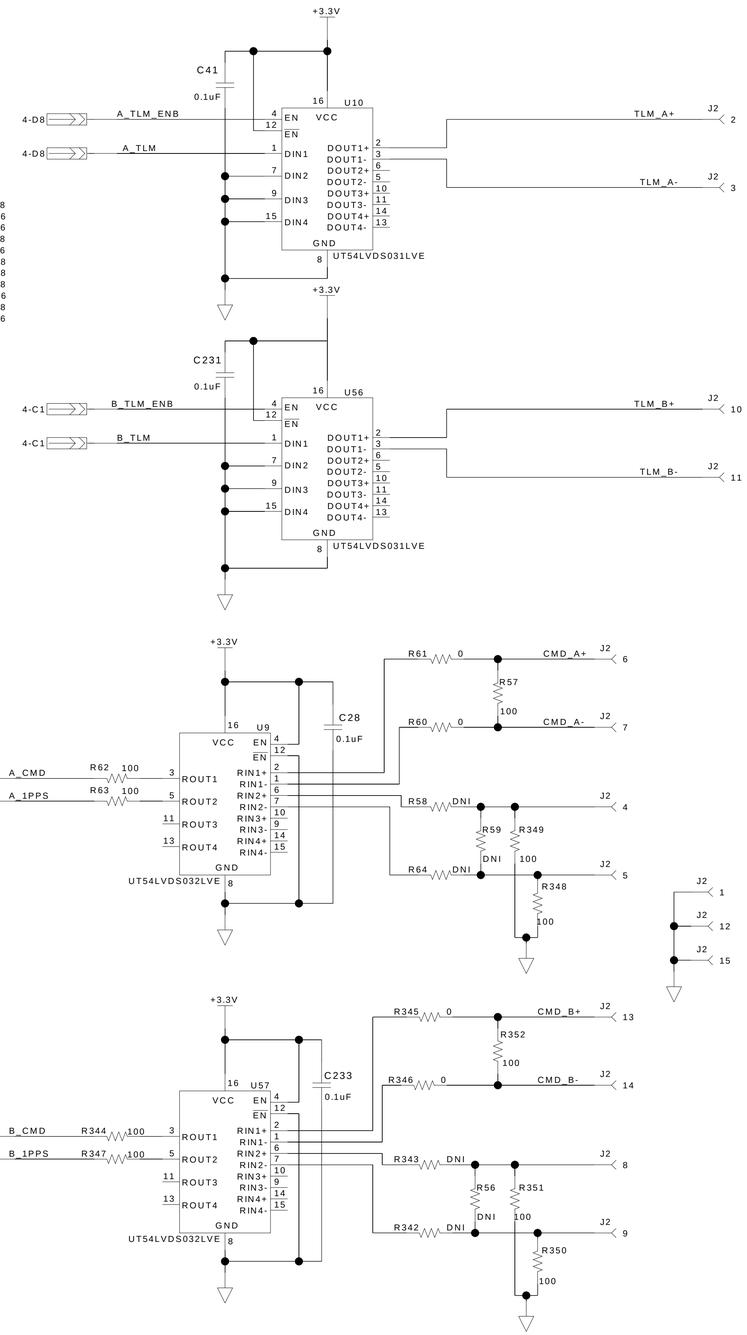

DOCUMENT CONTAINS EXPORT-CONTROLLED INFORMATION

CAGE CODE	SIZE	DWG NO.	REV
88898	D	7464-4001	-
SCALE NONE	-	DO NOT SCALE PRINT	SHEET 5 OF 18
CAD SYSTEM IDENT Version	APL CAD FILE IDENT File Path		

01/10/2014 10:07

REVISIONS

REV	DESCRIPTION

Housekeeping

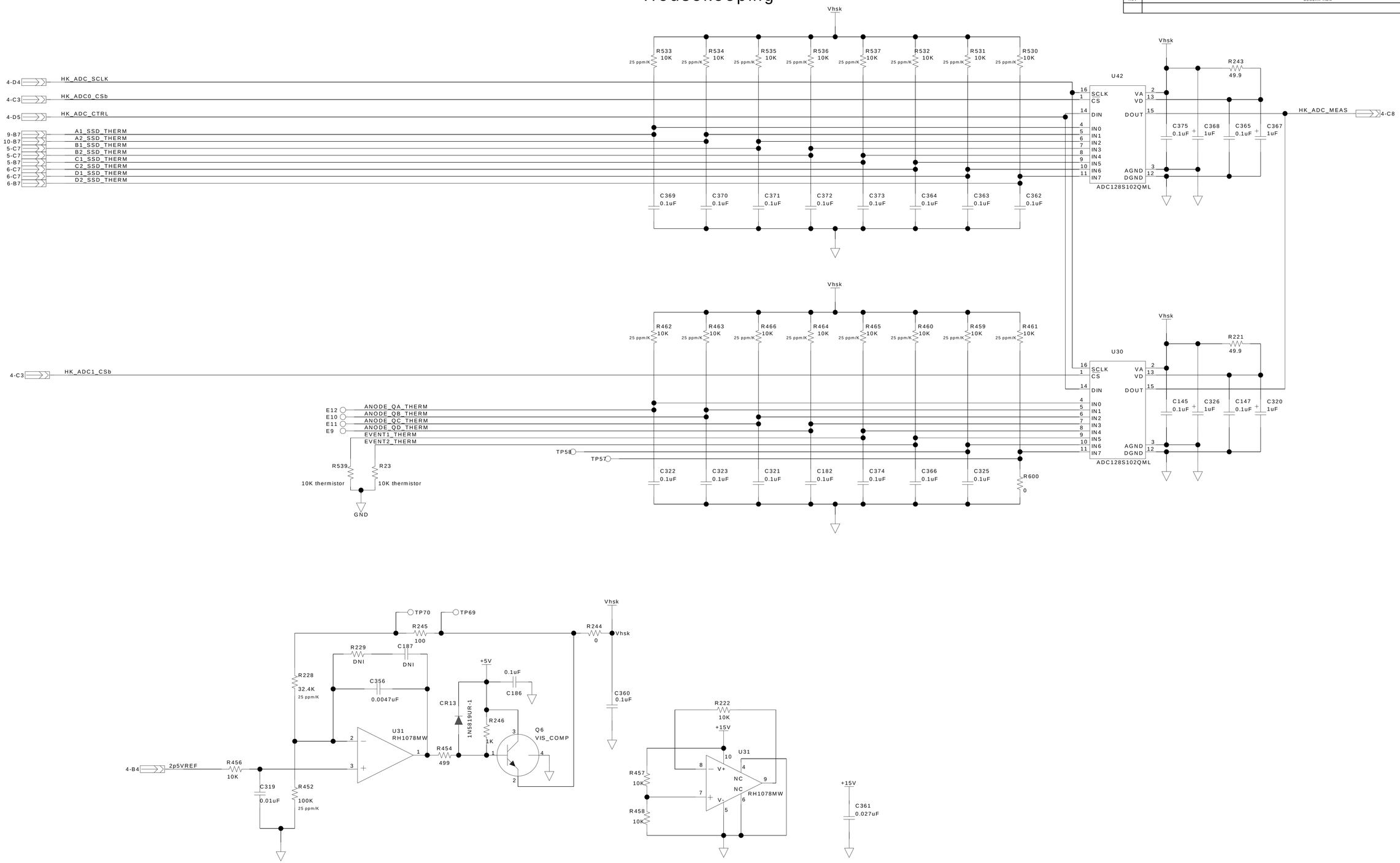

DOCUMENT CONTAINS EXPORT-CONTROLLED INFORMATION

CAGE CODE	SIZE	DWG NO.	REV
88898	D	7464-4001	-

SCALE: NONE — DO NOT SCALE PRINT SHEET 6 OF 18

CAD SYSTEM IDENT Version | APL CAD FILE IDENT File Path

06/10/2014 11:22

REVISIONS

REV	DESCRIPTION

QDACs

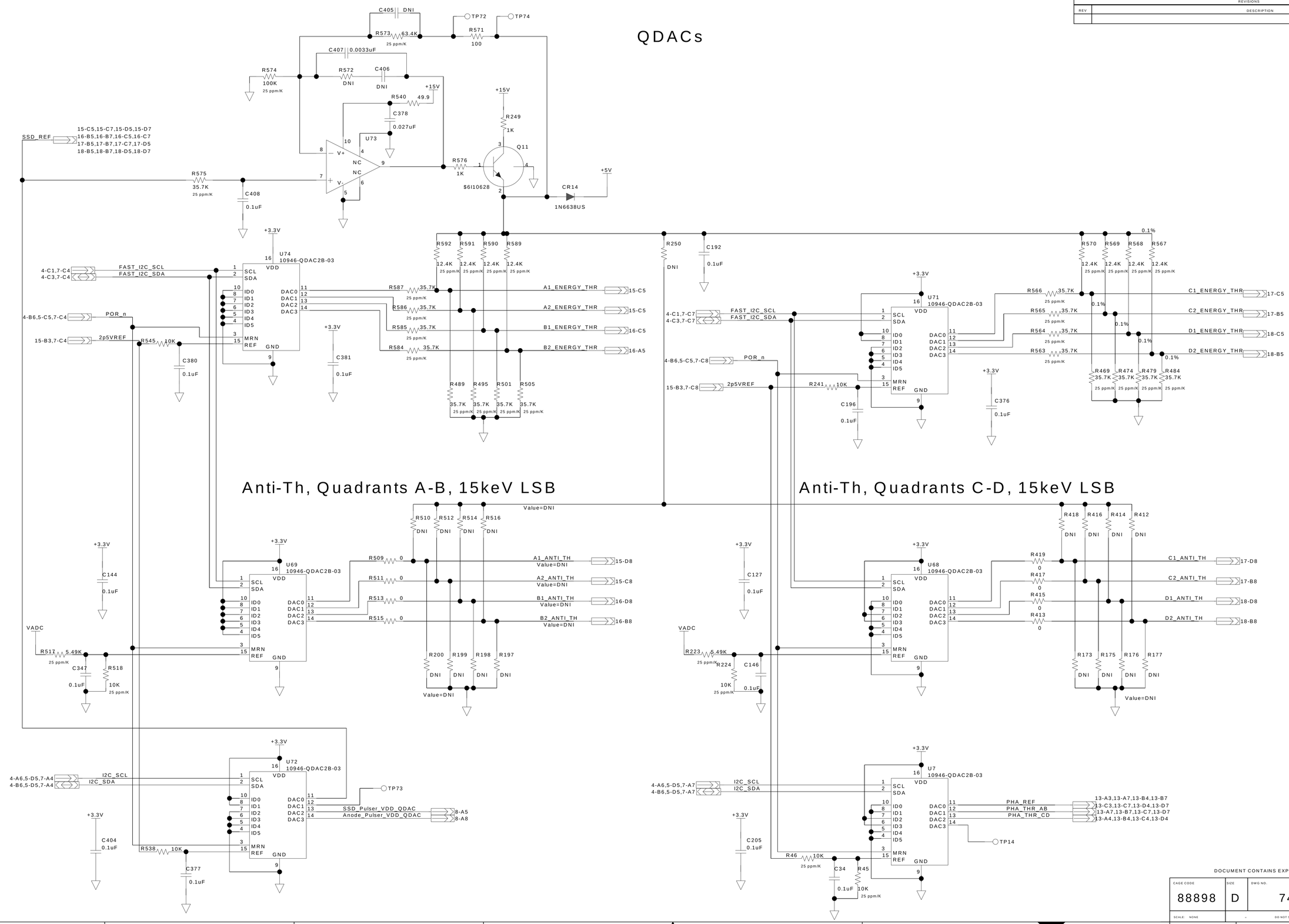

DOCUMENT CONTAINS EXPORT-CONTROLLED INFORMATION

CAGE CODE	SIZE	DWG NO.	REV
88898	D	7464-4001	-

SCALE NONE | DO NOT SCALE PRINT | SHEET 7 OF 18

CAD SYSTEM IDENT Version | APL CAD FILE IDENT File Path

01/10/2014 08:44

REVISIONS

REV	DESCRIPTION

Test Pulsers

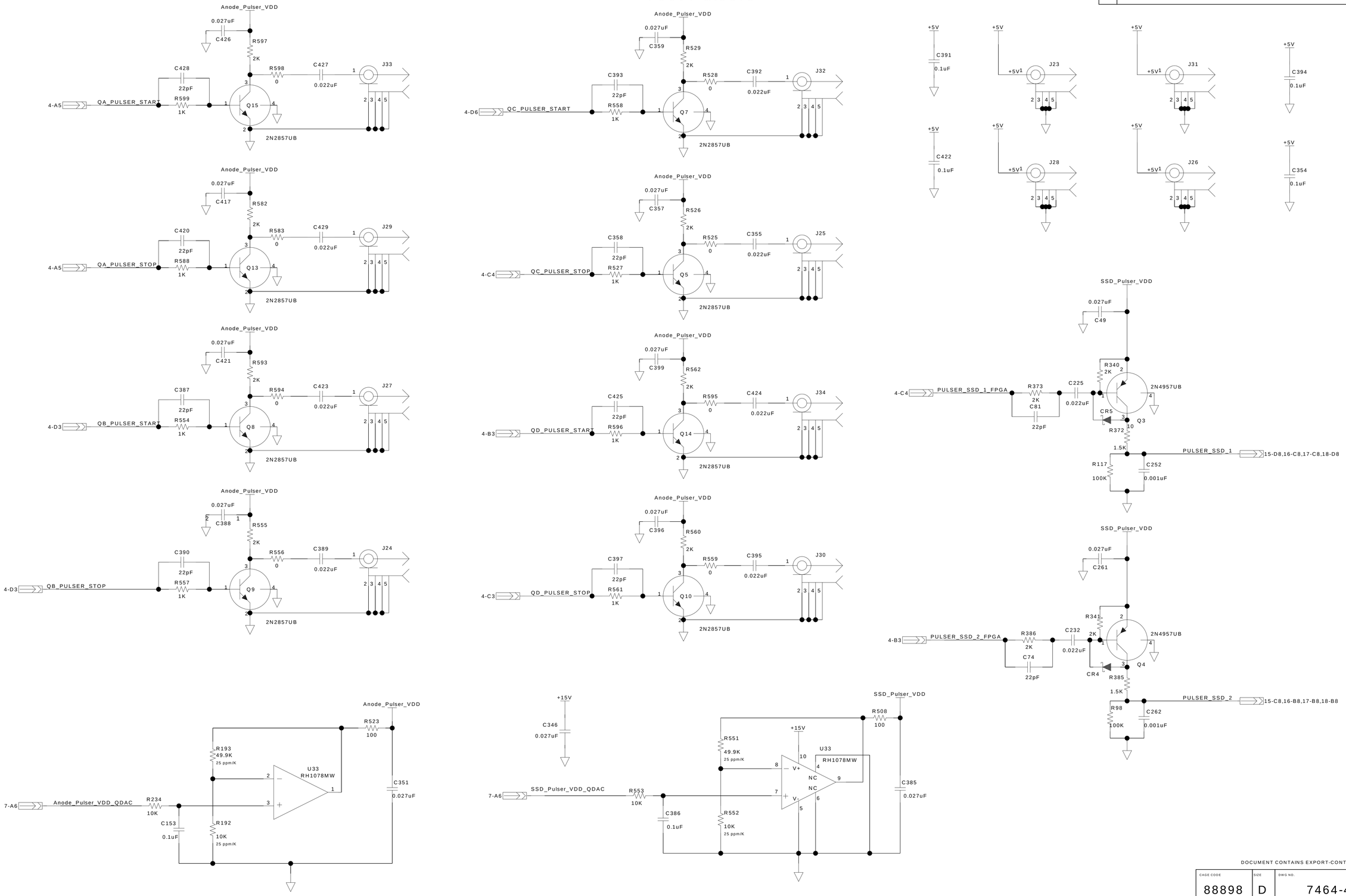

DOCUMENT CONTAINS EXPORT-CONTROLLED INFORMATION

CAGE CODE	SIZE	DWG NO.	REV
88898	D	7464-4001	-

SCALE: NONE – DO NOT SCALE PRINT SHEET 8 OF 18

CAD SYSTEM IDENT Version | APL CAD FILE IDENT File Path

01/10/2014-08:48

REVISIONS

REV	DESCRIPTION

Time-of-Flight, Quadrant A

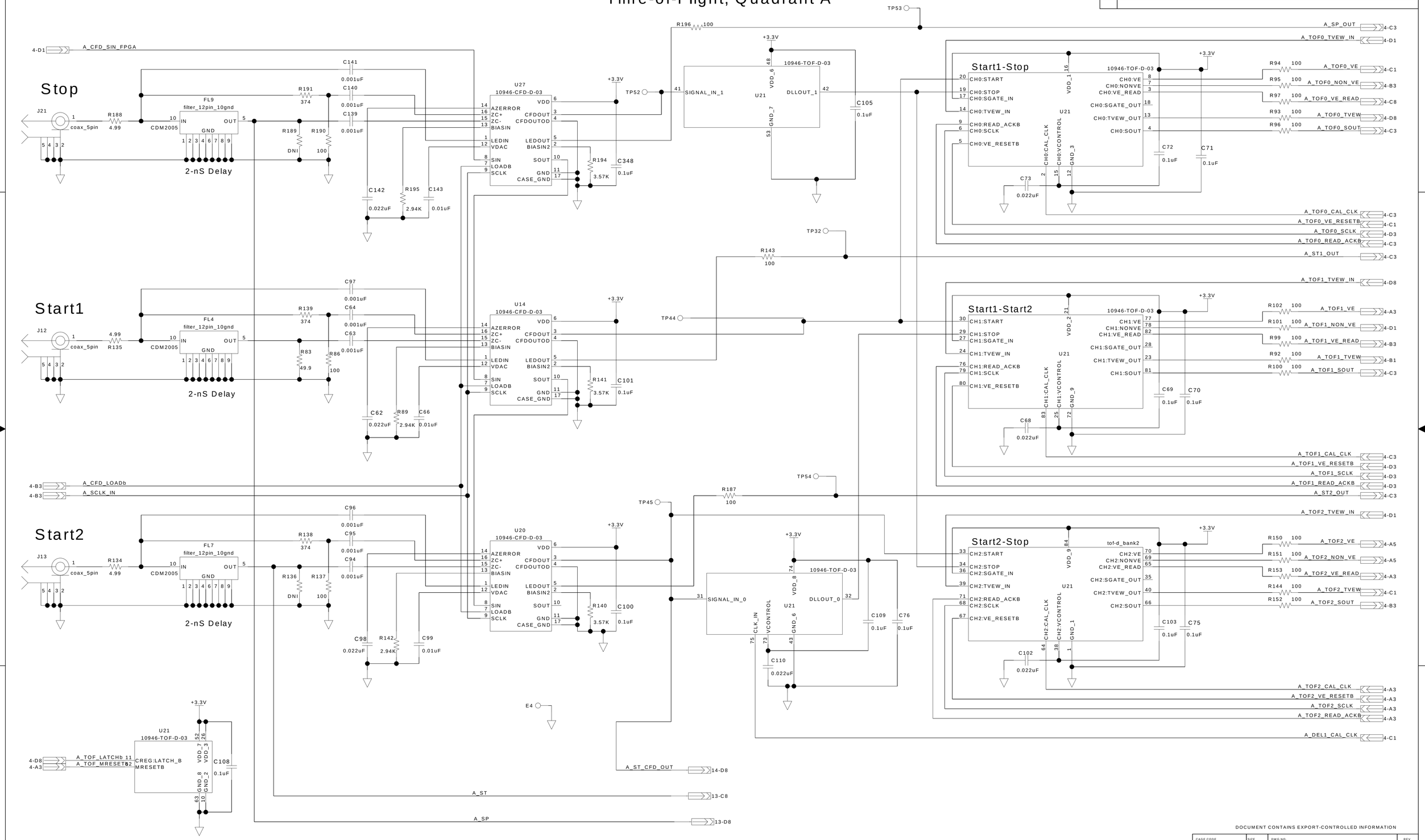

DOCUMENT CONTAINS EXPORT-CONTROLLED INFORMATION

CAGE CODE	SIZE	DWG NO.	REV
88898	D	7464-4001	-

SCALE NONE | DO NOT SCALE PRINT | SHEET 9 OF 18

CAD SYSTEM IDENT Version | APL CAD FILE IDENT File Path

01/10/2014 10:27

REVISIONS

REV	DESCRIPTION

Time-of-Flight, Quadrant B

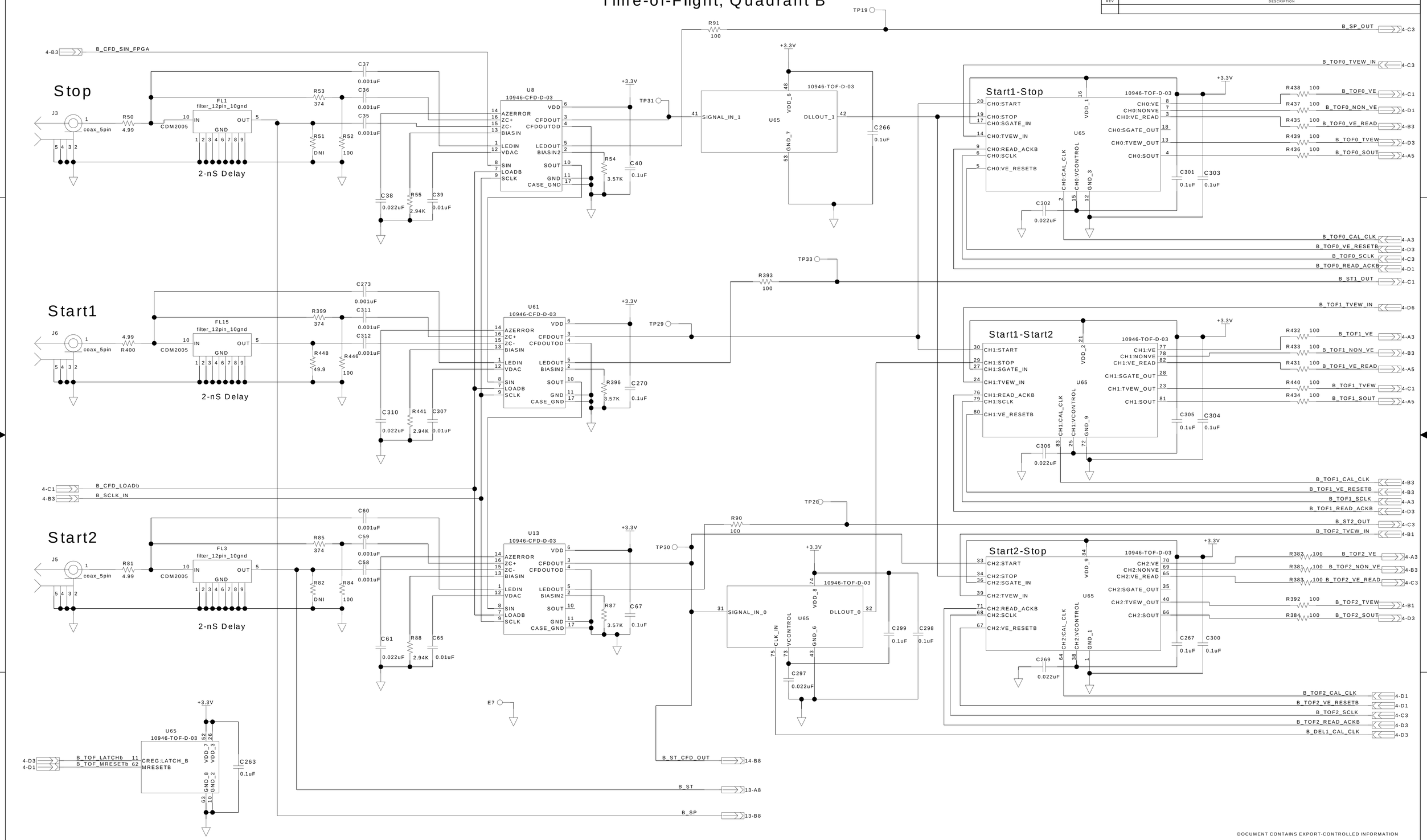

DOCUMENT CONTAINS EXPORT-CONTROLLED INFORMATION

CAGE CODE	SIZE	DWG NO.	REV
88898	D	7464-4001	-

SCALE: NONE — DO NOT SCALE PRINT — SHEET 10 OF 18

CAD SYSTEM IDENT Version — APL CAD FILE IDENT File Path

01/10/2014 10:25

REVISIONS

REV	DESCRIPTION

Time-of-Flight, Quadrant C

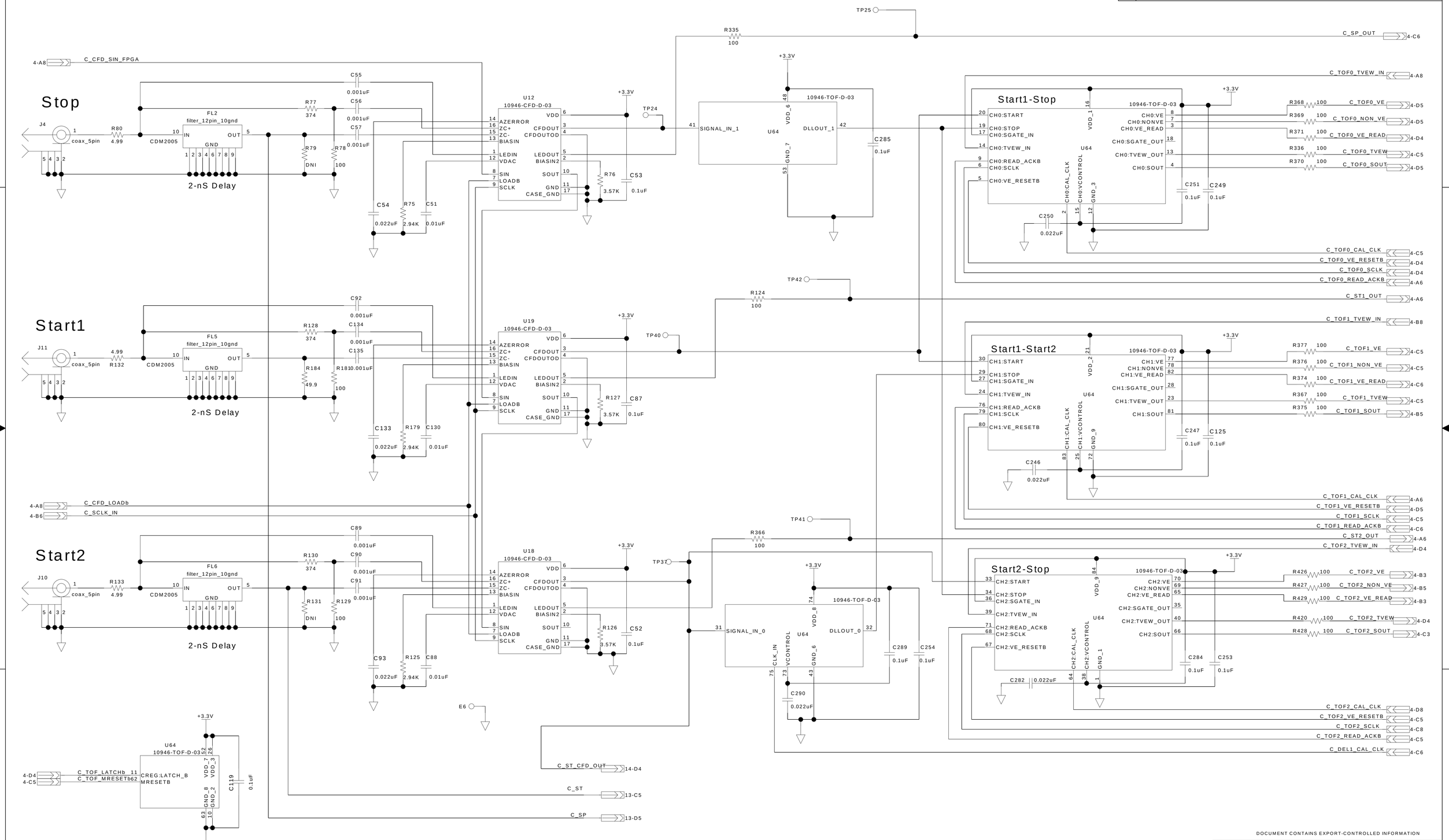

DOCUMENT CONTAINS EXPORT-CONTROLLED INFORMATION

CAGE CODE	SIZE	DWG NO.	REV
88898	D	7464-4001	-

SCALE: NONE — DO NOT SCALE PRINT SHEET 11 OF 18

CAD SYSTEM IDENT Version | APL CAD FILE IDENT File Path

01/10/2014:10:26

REVISIONS

REV	DESCRIPTION

Time-of-Flight, Quadrant D

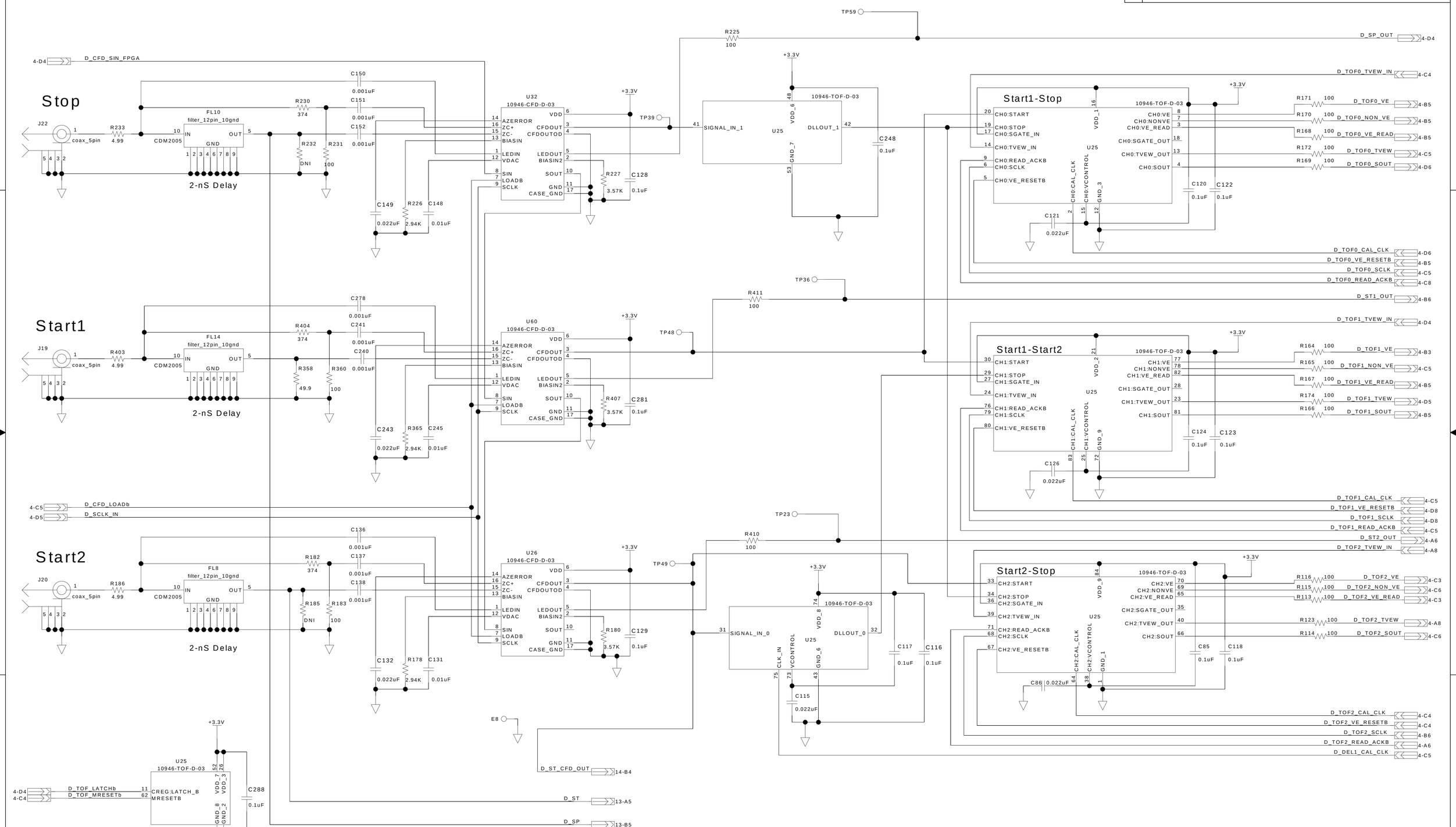

DOCUMENT CONTAINS EXPORT-CONTROLLED INFORMATION

CAGE CODE	SIZE	DWG NO.	REV
88898	D	7464-4001	-

SCALE: NONE — DO NOT SCALE PRINT — SHEET 12 OF 18

CAD SYSTEM IDENT: Version — APL CAD FILE IDENT: File Path

01/10/2014:10:26

REVISIONS

REV	DESCRIPTION

PHA

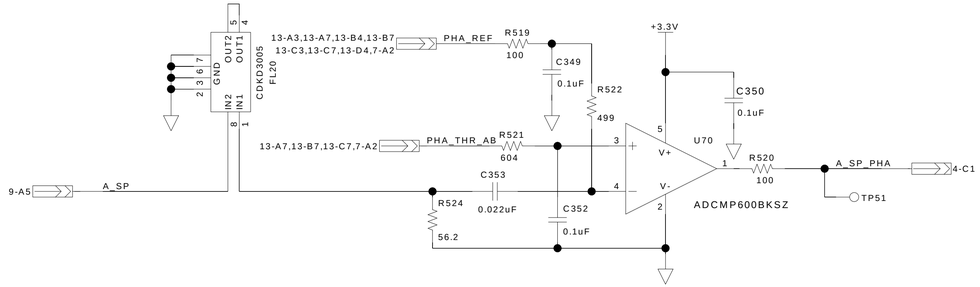

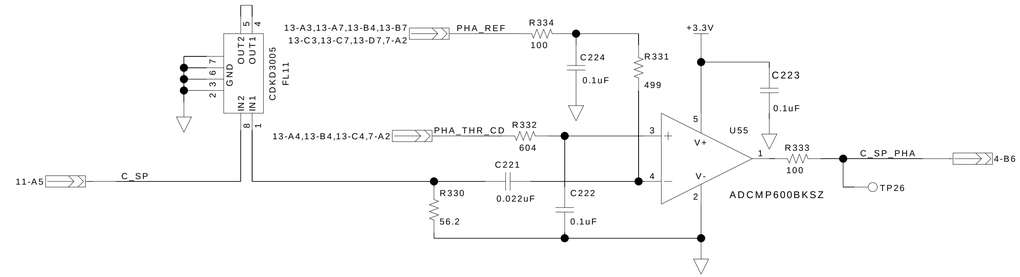

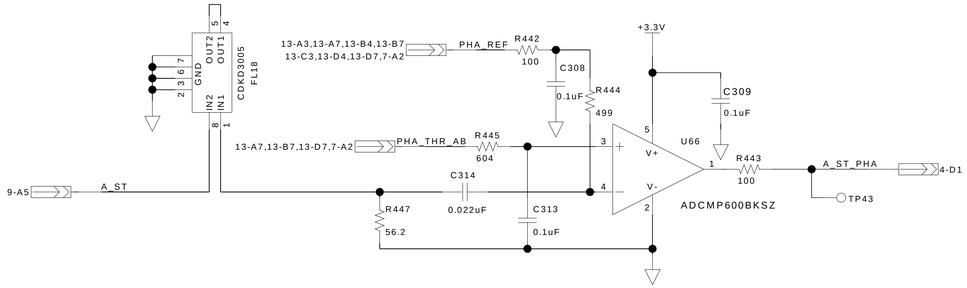

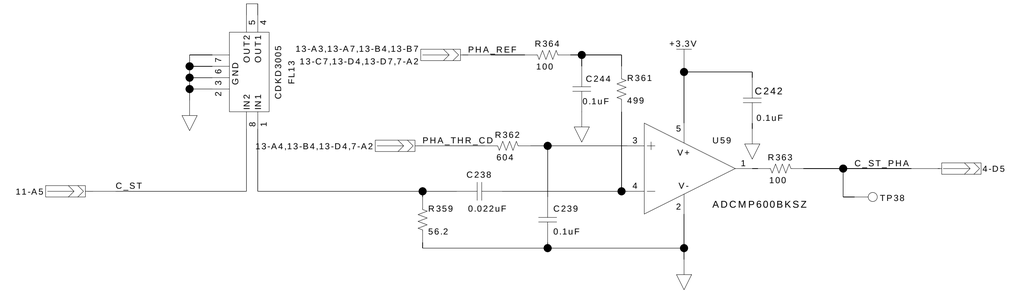

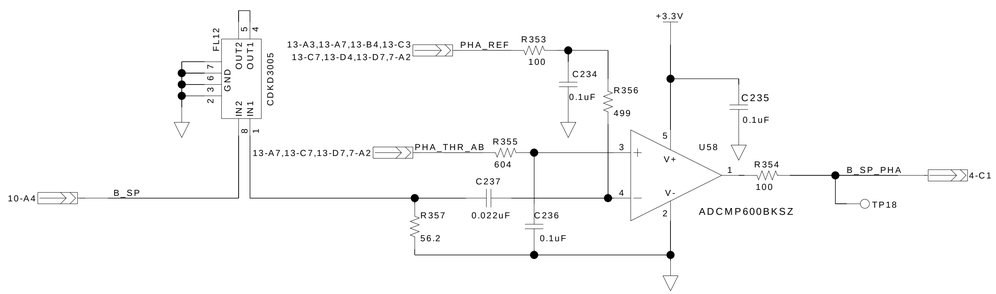

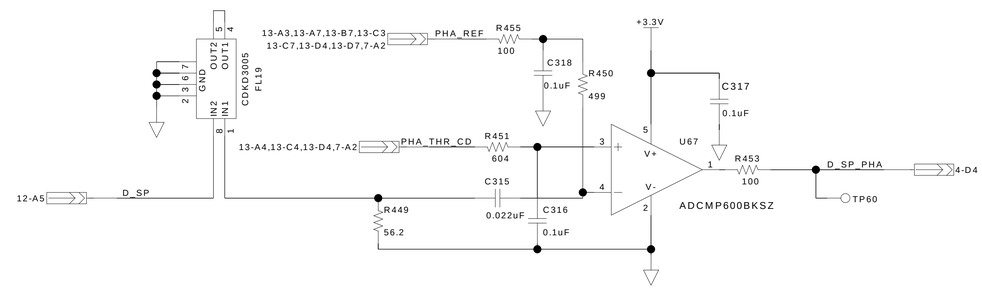

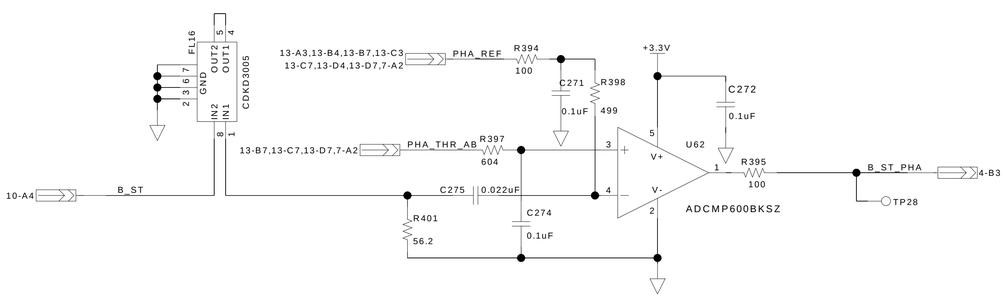

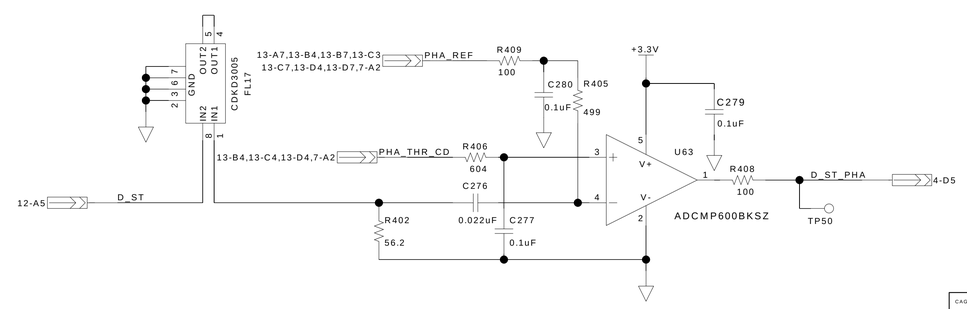

DOCUMENT CONTAINS EXPORT-CONTROLLED INFORMATION

CAGE CODE	SIZE	DWG NO.	REV
88898	D	7464-4001	-

SCALE NONE | DO NOT SCALE PRINT | SHEET 13 OF 18

CAD SYSTEM IDENT Version | APL CAD FILE IDENT File Path

01/10/2014 16:02

REVISIONS

REV	DESCRIPTION

Time-of-Flight, Electron Window

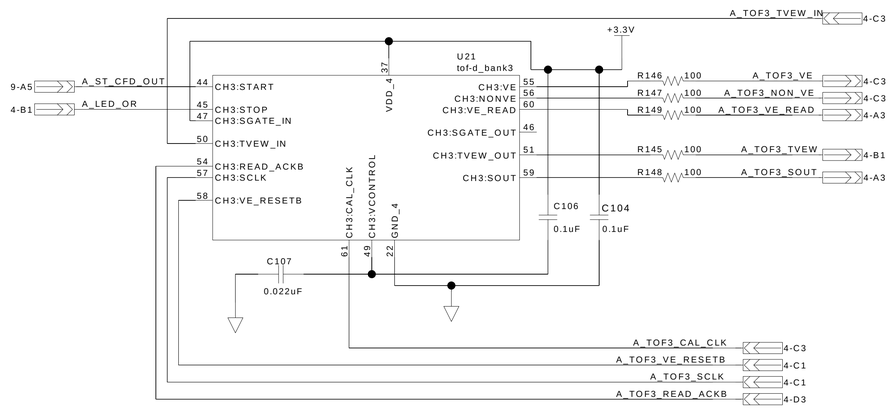

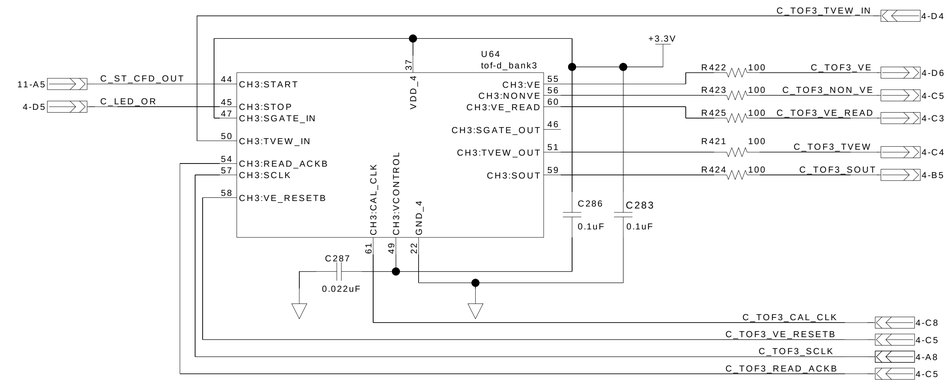

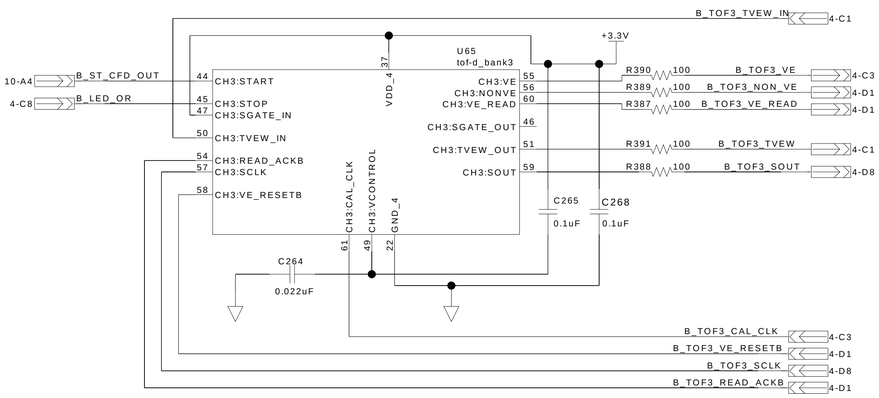

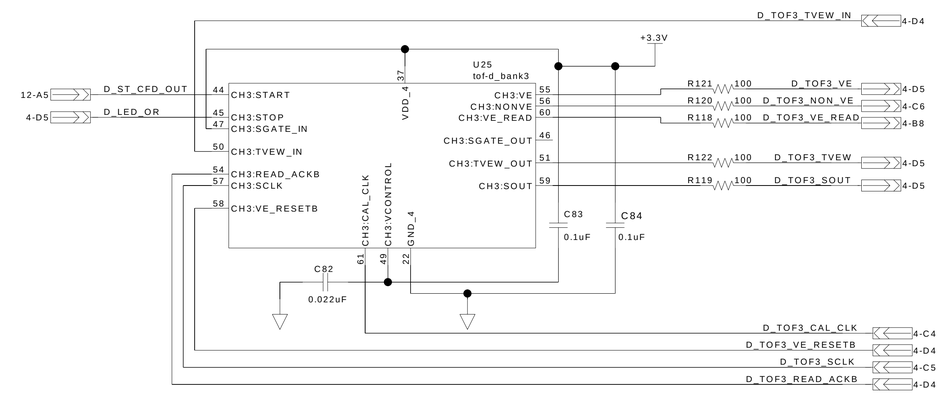

DOCUMENT CONTAINS EXPORT-CONTROLLED INFORMATION

CAGE CODE	SIZE	DWG NO.	REV
88898	D	7464-4001	-

SCALE NONE – DO NOT SCALE PRINT SHEET 14 OF 18

CAD SYSTEM IDENT Version

APL CAD FILE IDENT File Path

30/09/2014 14:52

Energy, Quadrant A

REVISIONS	
REV	DESCRIPTION

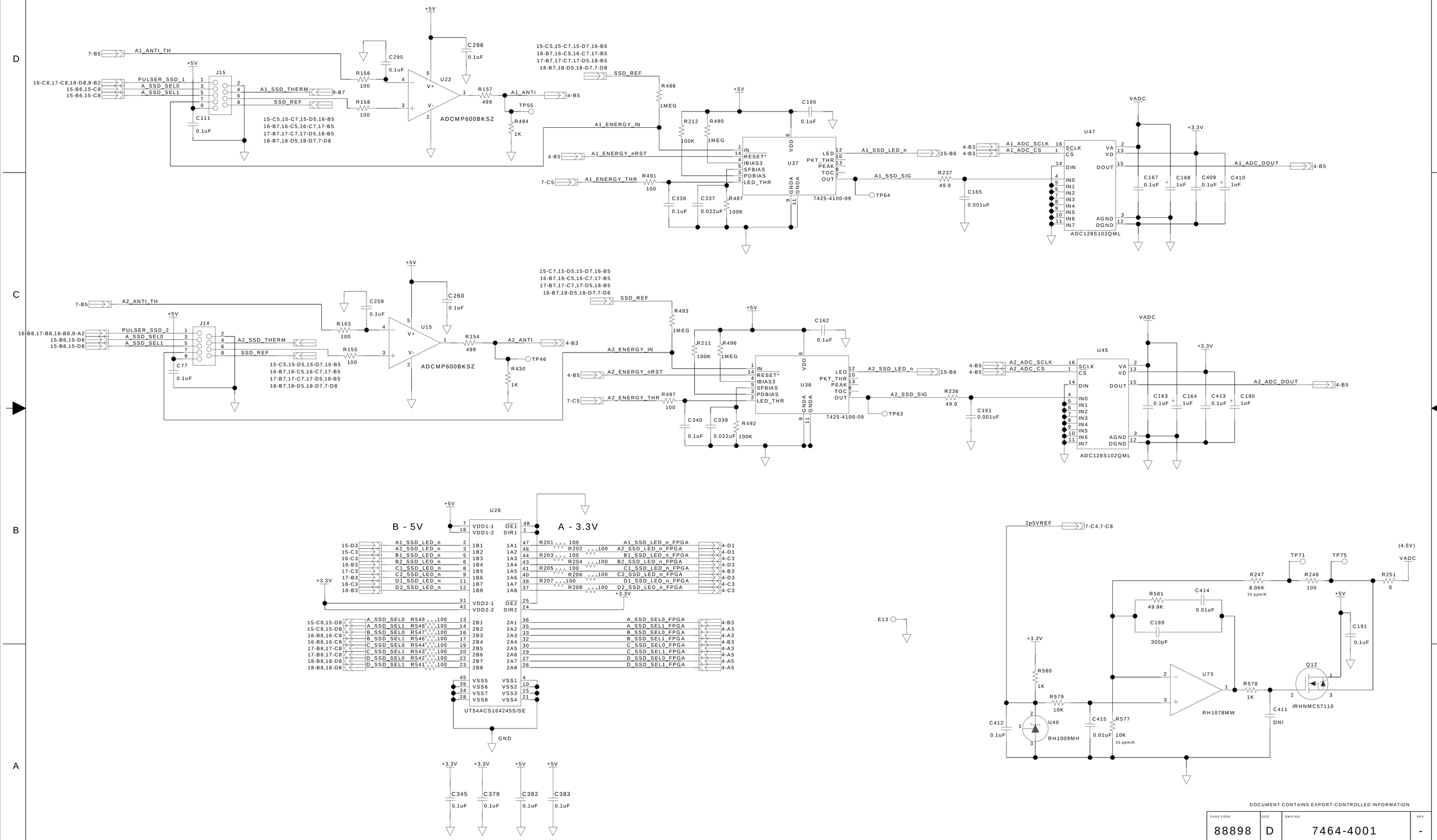

DOCUMENT CONTAINS EXPORT-CONTROLLED INFORMATION

CAGE CODE	SIZE	DWG NO.	REV
88898	D	7464-4001	-

SCALE NONE | DO NOT SCALE PRINT | SHEET 15 OF 18

CAD SYSTEM IDENT Version | APL CAD FILE IDENT File Path

06/10/2014 11:24

Energy, Quadrant B

REVISIONS

REV	DESCRIPTION

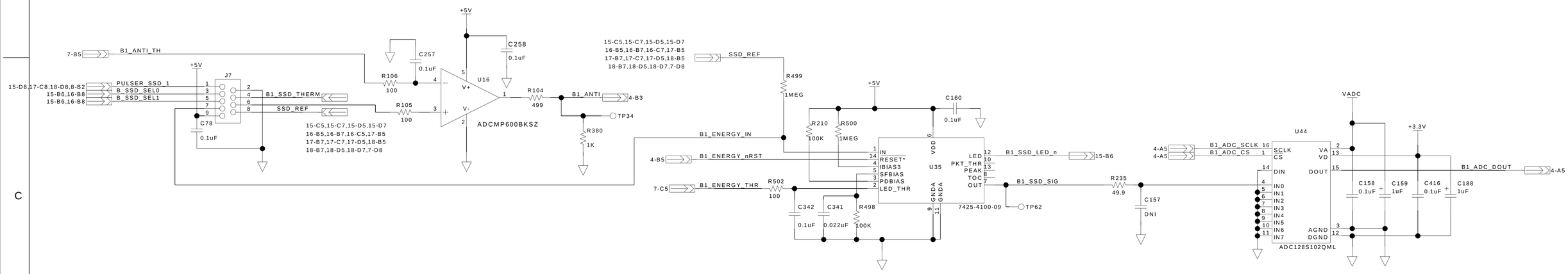

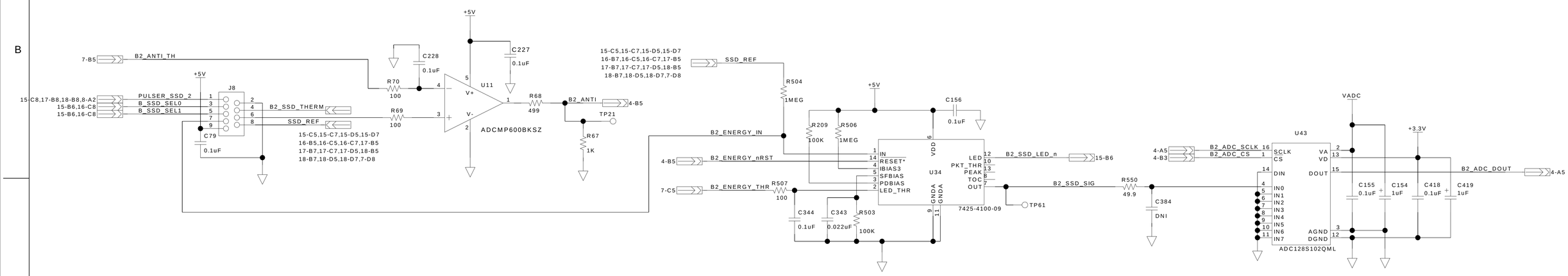

DOCUMENT CONTAINS EXPORT-CONTROLLED INFORMATION

CAGE CODE	SIZE	DWG NO.	REV
88898	D	7464-4001	-

SCALE NONE – DO NOT SCALE PRINT SHEET 16 OF 18

CAD SYSTEM IDENT Version

APL CAD FILE IDENT File Path

06/10/2014 11:23

REVISIONS

REV	DESCRIPTION

Energy, Quadrant C

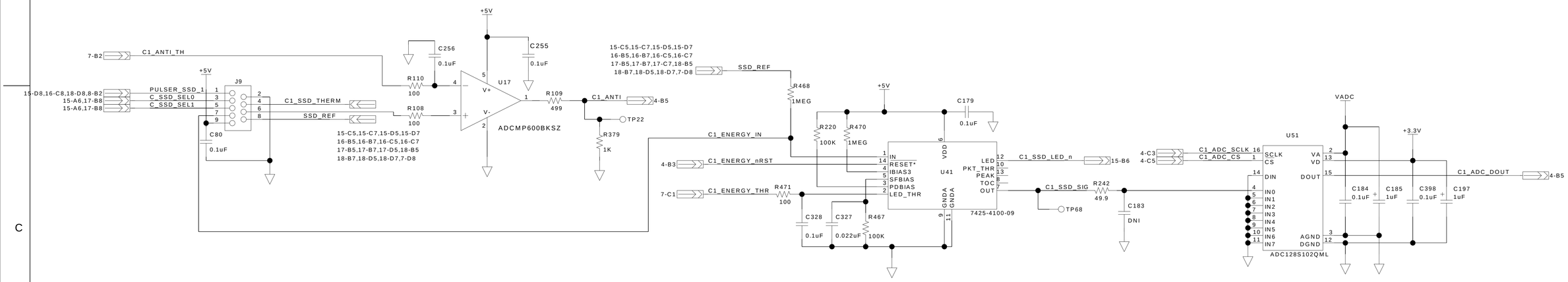

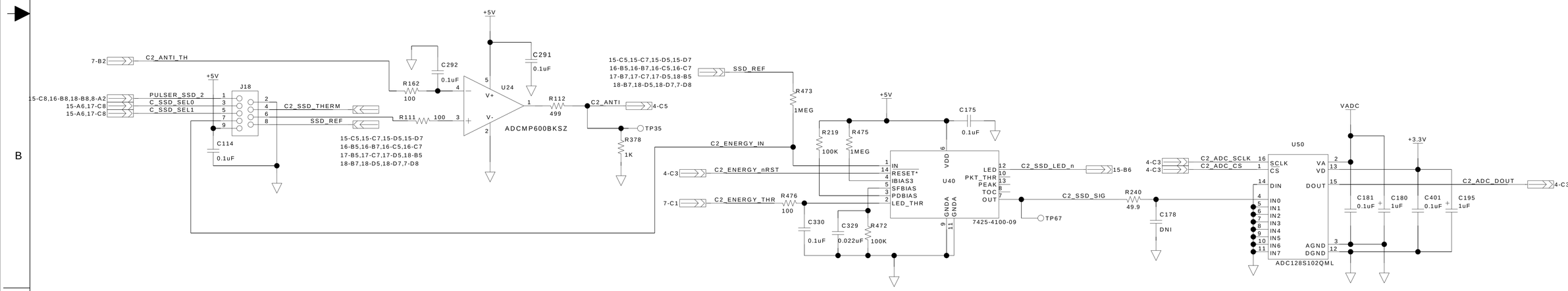

DOCUMENT CONTAINS EXPORT-CONTROLLED INFORMATION

CAGE CODE	SIZE	DWG NO.	REV
88898	D	7464-4001	-

SCALE: NONE — DO NOT SCALE PRINT — SHEET 17 OF 18

CAD SYSTEM IDENT: Version

APL CAD FILE IDENT: File Path

06/10/2014 11:23

REVISIONS

REV	DESCRIPTION

Energy, Quadrant D

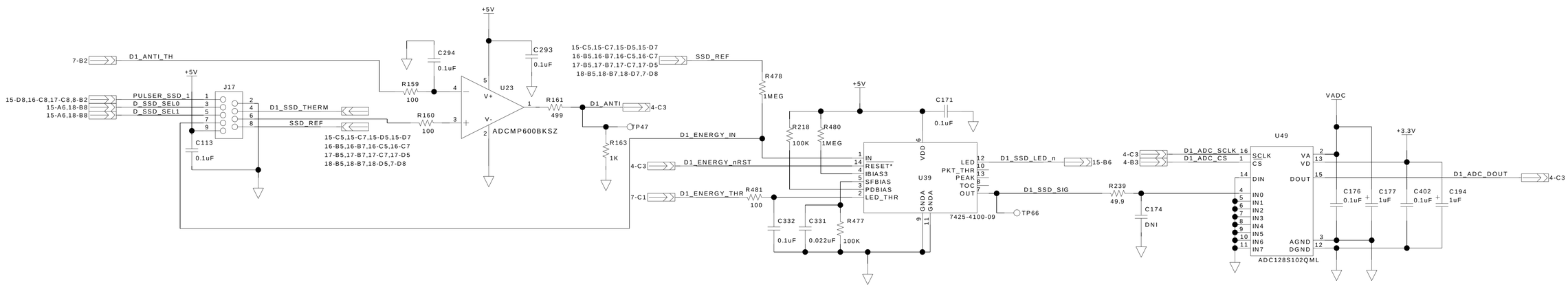

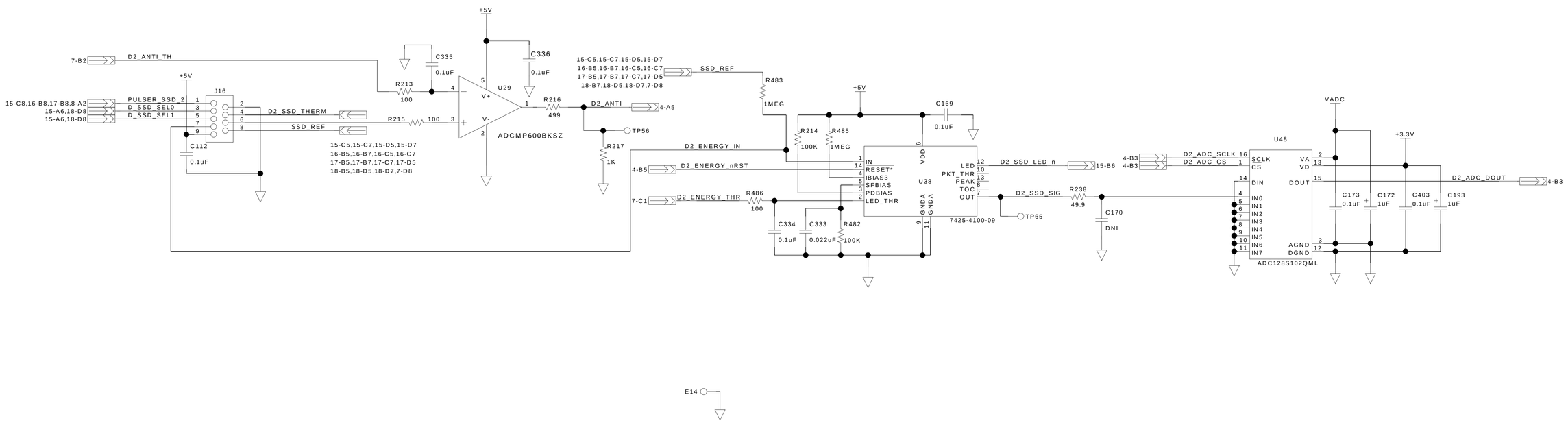

DOCUMENT CONTAINS EXPORT-CONTROLLED INFORMATION

CAGE CODE	SIZE	DWG NO.	REV
88898	D	7464-4001	-

SCALE: NONE — DO NOT SCALE PRINT SHEET 18 OF 18

CAD SYSTEM IDENT Version | APL CAD FILE IDENT File Path

06/10/2014 11:24

DWG NO	SH
7464-4001	X

REVISIONS	
REV	DESCRIPTION

NOTES:

1. WHERE APPLICABLE, UNLESS OTHERWISE SPECIFIED:
   ALL RESISTANCES ARE IN OHMS
   ALL CAPACITANCES ARE IN FARADS
   ALL VOLTAGES ARE DC
   THE SYMBOL _ REPRESENTS A SPACE

2. DNI = DO NOT INSTALL

THIS DOCUMENT CONTAINS INFORMATION THAT IS SUBJECTED TO
THE INTERNATIONAL TRAFFIC IN ARMS REGULATIONS (22 CFR PT. 120 ET SEQ.)
OR THE EXPORT ADMINISTRATION REGULATIONS (15CFR PT. 730 ET SEQ.)
EXPORT, INCLUDING DISCLOSURE TO FOREIGN PERSONS IN THE UNITED STATES,
WITHOUT PRIOR AUTHORIZATION IS PROHIBITED.

PARTS LIST

BASIC QTY/ASSY	ITEM NO.	DWG SIZE	PRINT OR IDENTIFYING NUMBER	CIRCUIT SYMBOL OR ZONE	NOMENCLATURE OR DESCRIPTION	STOCK SIZE	MATERIAL AND/OR MATERIAL SPECIFICATION	CAGE CODE	REV
7464-4001	D	7464-4000	REF	7464					
PART NUMBER	SIZE	NEXT ASSEMBLY	QTY/NA	USED ON	EFFECTIVITY END ITEM SER. NO.		WEIGHT		
SURFACE TREATMENT (BEFORE ASSY)					SURFACE ROUGHNESS				

THE JOHNS HOPKINS UNIVERSITY
APPLIED PHYSICS LABORATORY
JOHNS HOPKINS ROAD LAUREL, MD 20723-6099

Schematic
Event Board
SSP EPI-Lo

CAGE CODE	SIZE	DWG NO.	REV
88898	D	7464-4001	-

SCALE: NONE | DO NOT SCALE PRINT | SHEET 1 OF 18

CAD SYSTEM IDENT: Version
APL CAD FILE IDENT: File Path

28/10/2014 17:02